Delta Electronics Corp.

APPROVAL SHEET

Customer Name .: _____

Model Name.: COOLER

Delta Part No.: FHS-A6025B02

Customer Part No.: _____

Spec Issue Date .: 2012/06/13

Spec Revision : 01

PLEASE SEND ONE COPY OF THIS SPECIFICATION BACK AFTER YOU SIGNED APPROVAL FOR PRODUCTION PRE-ARRANGMENT.

Approved By: _____

Date: _____

Approval	Check	Designer
Charles. Chen	Charles. Chen	Sheila. Hu

Delta Electronics Corp.

REV.	Description	Drawn	Checked	Approved	Issue Date
00	**ISSUE SPEC**	Skyler.Huang	Charles.Chen	Charles.Chen	05/29'12
01	**Change fan specification in page 12 to 21**	Sheila.Hu	Charles.Chen	Charles.Chen	06/13'12

Description:

SAMPLE REVISION CODE LIST

Part No.	REV
DELTA MODEL : FHS-A6025B02	TOTAL 21 PAGE 01

Delta Electronics Corp.

CONTENTS

Delta Electronics Corp.

1. SPECIFICATION

Characters

Item	Description
Scope	THIS SPECIFICATION DEFINES THE ELECTRICAL AND MECHANICAL CHARACTERISTICS OF THE FAN HEATSINK
Application	INTEL LGA2011 CPU COOLER
Specification	
a: Thermal Resistance	0.20 (℃/W) (REF.)
b: total weight	540 g (REF.)
c: clip force	25kgf (REF.)

BOM

Item	Part Name	Material	Part NO.	Q'TY	Remark
1	FAN	PBT	3620927211	1	
2	FAN SCREW	SUS	3109182300	2	
3	FIN	AL1050+CU 1100	3346397100	1	
4	SCREW	SUS	3105359900	4	
5	SPRING	SWAP	3462028800	4	
6	E-CLIP	S20C	3110264700	4	
7	CU BLOCK	CU 1100	3346397300	1	
8	AL SINK	ADC 12	3346814700	1	
9	TIM	TC-1996	4021101500	0.308g	
10	Heat Pipe	C1020	3460094500~ 3460094800	4	
11	SPACER	PBT	3244747000	4	
12					
13					
14					
15					

2. PRINT

Assembly Drawing

DRAWING:

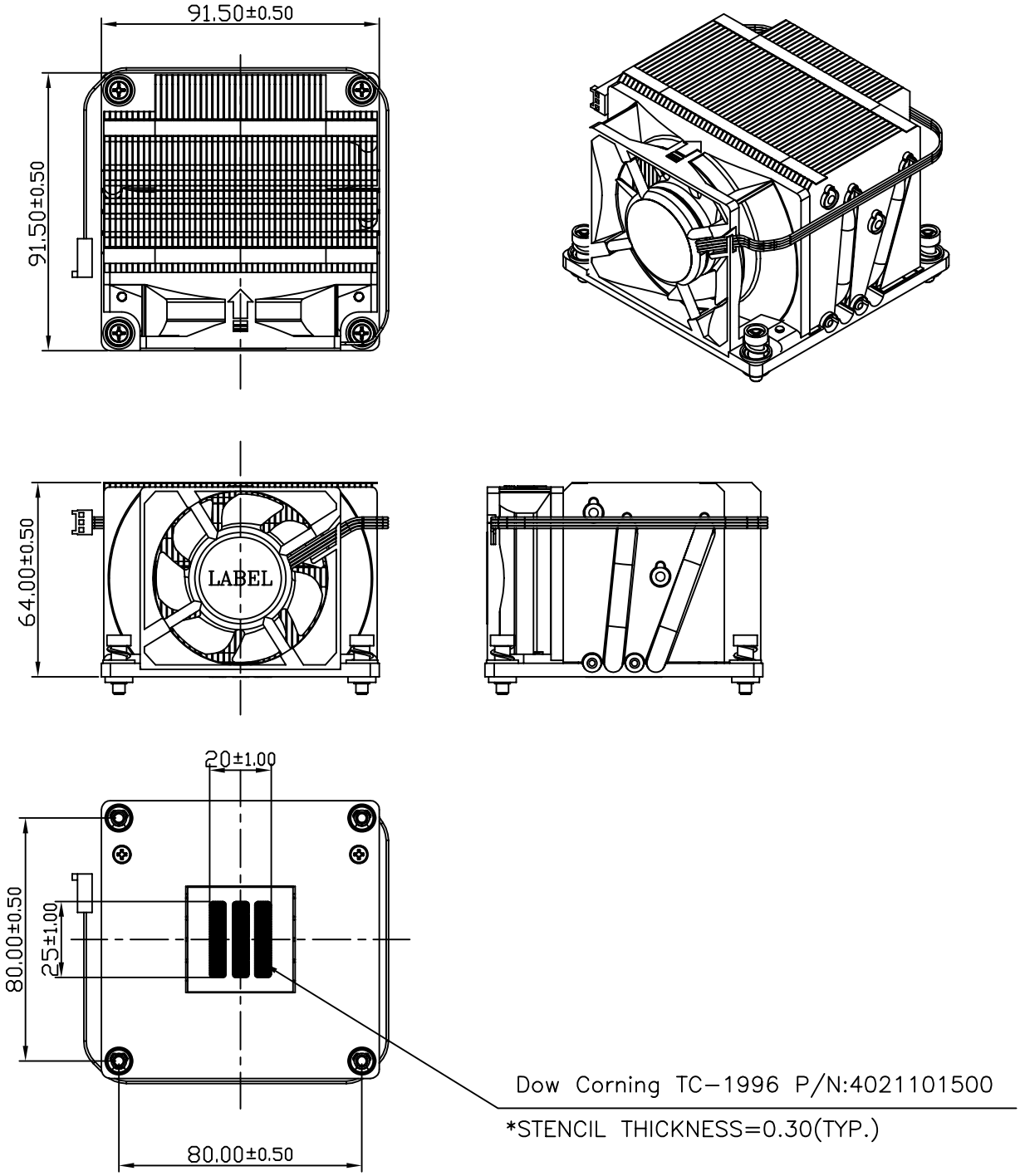

台達電子工業股份有限公司
DELTA ELECTRONICS, INC.

DELTA MODEL: FHS-A6025B02

Drawn: Skyler 05/28'12

CUSTOMER NAME: -----

CUSTOMER P/N: -----

DIMENSIONAL TOLERANCES HOLES : ±0.05 ANGLES : ±0.5°

( )		( )		( )				( )	
<30	:±0.25	DECIMALS		UP~100	:±0.2	250~300	:±0.4	UP~600	:±1.5
>30~100	:±0.35	X	:±0.3	100~150	:±0.25	300~350	:±0.45	600~900	:±2.4
>100~300	:±0.5	X.X	:±0.2	150~200	:±0.3	350~400	:±0.5	900~OVER	:±3.1
ABOVE 300	:±0.6	X.XX	:±0.1	200~250	:±0.35				

THIRD ANGLE PROJECTION

Description: PRODUCTION SPEC. (PHYSICAL DIMENSION)

A4 SIZE

Part No. FHS-A6025B02-PD

REV. --

SCALE	---	UNIT	mm	USED ON	COOLER

SHEET 1 OF 1

ISSUE DATE:

DF-PSLA4V-3R00

NO	DESCRIPTION	PART NO.	Q'TY
1	LABEL	3267129600	1
2	FAN	3620927211	1
3	FIN	3346397100	1
4	HEATPIPE	3460094500~ 3460094800	4
5	SCREW	3105359900	4
6	SPRING	3462028800	4
7	CU BLOCK	3346397300	1
8	AL SINK	3346814700	1
9	FAN SCREW	3109182300	2
10	SPACER	3244747000	4
11	E-CLIP	3110262800	4
12	GREASE	4021101500	1

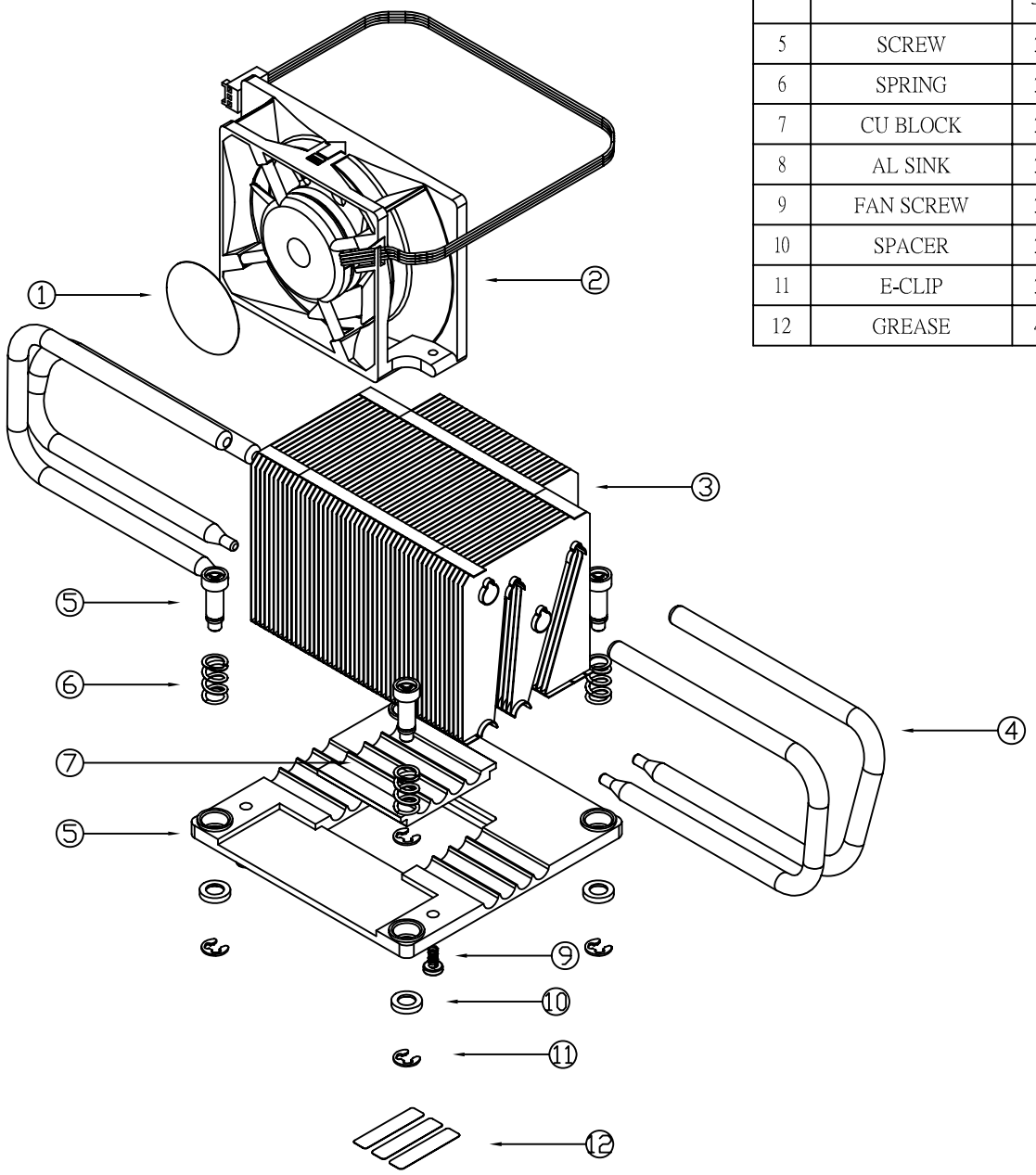

台達電子工業股份有限公司
DELTA ELECTRONICS, INC.

DELTA MODEL: FHS-A6025B02

Drawn: Skyler 05/28'12

CUSTOMER NAME: -----

CUSTOMER P/N: -----

DIMENSIONAL TOLERANCES HOLES : ±0.05 ANGLES : ±0.5°

( )		( )		( )				( )	
<30	:±0.25	DECIMALS		UP~100	:±0.2	250~300	:±0.4	UP~600	:±1.5
>30~100	:±0.35	X	:±0.3	100~150	:±0.25	300~350	:±0.45	600~900	:±2.4
>100~300	:±0.5	X.X	:±0.2	150~200	:±0.3	350~400	:±0.5	900~OVER	:±3.1
ABOVE 300	:±0.6	X.XX	:±0.1	200~250	:±0.35				

THIRD ANGLE PROJECTION

Description: PRODUCTION SPEC. (ASSEMBLY ORDER)

A4 SIZE

Part No. FHS-A6025B02-AS

REV. --

SCALE	---	UNIT	---	USED ON	COOLER

SHEET 1 OF 1

ISSUE DATE:

DF-PSLA4V-3R00

3. PACKING PLAN

Packing Specification

PART NO.	FHS-A6025B02			
BASIC DATA	QUANTITY/CARTON	24PCS (3 LAYERS/CARTON, 8 PCS/LAYER)		
	PRODUCTION NET WEIGHT	13 Kg (REF)		
	PRODUCTION GROSS WEIGHT	15 Kg (REF)		
20(ft)CONTAINER ILLUSTRATE	SIZE	5.889(L)*2.352(w)*2.386(H)m	PACKING QUANTITY	20 PALLETS/CONTAINER
	CONTAINER	STEEL		

CONTAINER FORM

CONTAINER LOADING MATHOD

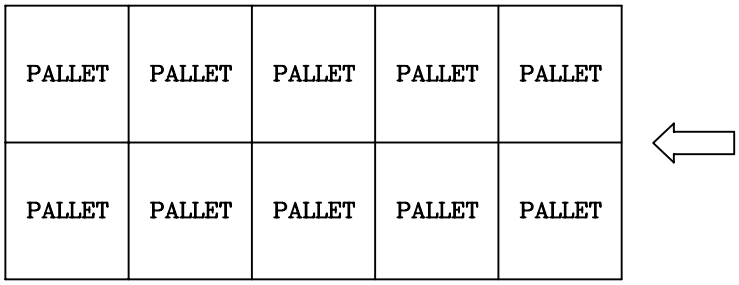

TOP VIEW

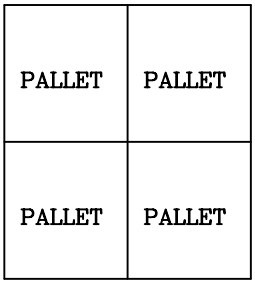

FRONT VIEW

PALLET LOADING ILLUSTRATE	SIZE	120(L)*100(w)*13.5(H)cm	PACKING QUANTITY	24 CARTONS/PALLET
	PALLET	WOOD		

PALLET ILLUSTRATE

PALLET LOADING MATHOD

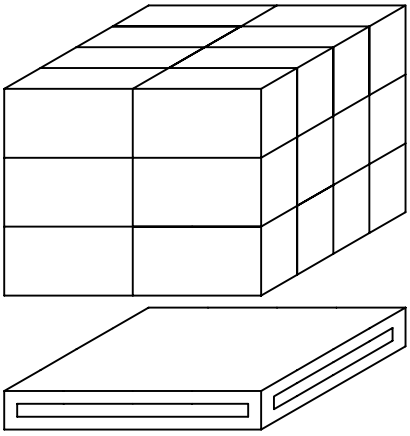

台達電子工業股份有限公司
DELTA ELECTRONICS, INC.

DIMENSIONAL TOLERANCES HOLES : ±0.05 ANGLES : ±0.5°

( )		( )		( )				( )	
<30	:±0.25	DECIMALS		UP~100	:±0.2	250~300	:±0.4	UP~600	:±1.5
>30~100	:±0.35	X	:±0.3	100~150	:±0.25	300~350	:±0.45	600~900	:±2.4
>100~300	:±0.5	X.X	:±0.2	150~200	:±0.3	350~400	:±0.5	900~OVER	:±3.1
ABOVE 300	:±0.6	X.XX	:±0.1	200~250	:±0.35				

SCALE	---	UNIT	---	USED ON	COOLER

DELTA MODEL: FHS-A6025B02

Drawn: Skyler 05/28'12

CUSTOMER NAME: -----

CUSTOMER P/N: -----

THIRD ANGLE PROJECTION

Description: PRODUCTION SPEC. (PACKAGE SPEC.)

A4 SIZE

FHS-A6025B02-PA

REV. 00

SHEET 1 OF 2

ISSUE DATE:

FRAME NAME : DF-PSLA4V-3R01.DWG

CARTON ILLUSTRATE	SIZE	498(L)*298(w)*265(H)(mm)	PACKING QUANTITY	3 LAYERS/CARTON
	MATERIAL	3 LAYERS"AB" FLUTE	CARTON WEIGHT	0.8 kg (REF.)

CARTON

CUSTOMER PART NO.	
DELTA PART NO.	
QUANTITY	
P/O NO.	
DATE CODE	
GROSS WEIGHT	

TRAY PACKING ILLUSTRATE	SIZE	490(L)*290(w)*90(H)(mm)	PACKING QUANTITY	8 PCS/TRAY
	MATERIAL	PET		
	MATERIAL WEIGHT	540g (REF.)		

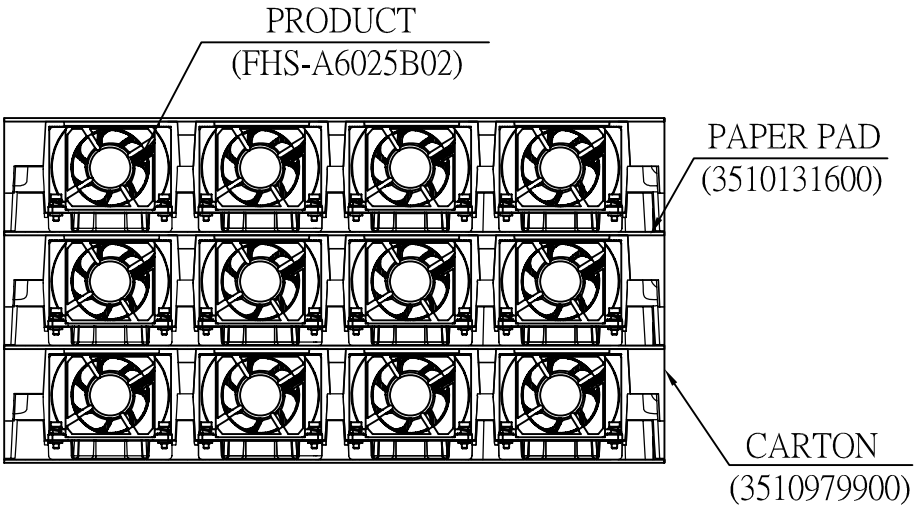

台達電子工業股份有限公司
DELTA ELECTRONICS, INC.

DIMENSIONAL TOLERANCES HOLES : ±0.05 ANGLES : ±0.5°

( )		( )		( )				( )	
<30	:±0.25	DECIMALS		UP~100	:±0.2	250~300	:±0.4	UP~600	:±1.5
>30~100	:±0.35	X	:±0.3	100~150	:±0.25	300~350	:±0.45	600~900	:±2.4
>100~300	:±0.5	X.X	:±0.2	150~200	:±0.3	350~400	:±0.5	900~OVER	:±3.1
ABOVE 300	:±0.8	X.XX	:±0.1	200~250	:±0.35				

SCALE	---	UNIT	---	USED ON	COOLER

DELTA MODEL: FHS-A6025B02

Drawn: Skyler 05/28'12

CUSTOMER NAME: -----

CUSTOMER P/N: -----

THIRD ANGLE PROJECTION

Description: PRODUCTION SPEC. (PACKAGE SPEC.)

A4 SIZE

FHS-A6025B02-PA

REV. 00

SHEET 2 OF 2

ISSUE DATE:

FRAME NAME : DF-PSLA4V-3R01.DWG

4. FAN

Fan Specification

SPECIFICATION FOR APPROVAL

Customer_____tMPBU_____

Description_____DC FAN_____

Part No. _____3620927211_____REV._____

Delta Model No.__AFB0612DH-8G33_____REV.__06____

Sample Issue No._____

Sample Issue Date__JUN.08.2012_____

PLEASE SEND ONE COPY OF THIS SPECIFICAITON BACK AFTER YOU SIGNED APPROVAL FOR PRODUCTION PRE-ARRANGMENT.

APPROVED BY:_____

DATE :_____

DELTA ELECTRONICS, INC.
TAOYUAN PLANT
252, SHANG YING ROAD, KUEI SAN INDUSTRIAL ZONE TAOYUAN SHIEN, TAIWAN, R.O.C.
TEL:886-(0)3-3591968
FAX:886-(0)3-3591991

DELTA ELECTRONICS, INC.
252, SHANG YING ROAD, KUEI SAN
TAOYUAN HSIEN 333, TAIWAN, R. O. C.
TEL : 886-(0)3-3591968
FAX : 886-(0)3-3591991

STATEMENT OF DEVIATION

****

■ NONE

□ DESCRIPTION :

DELTA ELECTRONICS, INC.
252, SHANG YING ROAD, KUEI SAN
TAOYUAN SHIEN 333, TAIWAN, R. O. C.
TEL : 886-(0)3-3591968
FAX : 886-(0)3-3591991

SPECIFICATION FOR APPROVAL

Customer:	tMPBU		
Description:	DC FAN		
Customer P/N:	3620927211	REV:	
Delta Model NO.:	AFB0612DH-8G33	**Delta Safety Model NO: AFB0612DH-8G33**	
Sample Rev:	06	Issue NO:	
Sample Issue Date:	JUN.08.2012	Quantity:	

1. SCOPE:

THIS SPECIFICATION DEFINES THE ELECTRICAL AND MECHANICAL CHARACTERISTICS OF THE DC BRUSHLESS AXIAL FLOW FAN. THE FAN MOTOR IS WITH SINGLE PHASE AND FOUR POLES.

2. CHARACTERS:

ITEM	DESCRIPTION
RATED VOLTAGE	12.0 VDC
OPERATION VOLTAGE	10.8 - 13.2 VDC
INPUT CURRENT	0.35 (MAX. 1.20) A **(CURRENT ON SAFETY LABEL 1.20A)**
INPUT POWER	4.20 (MAX. 14.40) W
SPEED (FAN ONLY)	7300±10% R.P.M.
SPEED (ON SINK)	7200±10% R.P.M.
MAX. AIR FLOW (AT ZERO STATIC PRESSURE)	0.878 (MIN. 0.790) M^3/MIN. 31.01 (MIN. 27.91) CFM
MAX. AIR PRESSURE (AT ZERO AIRFLOW)	13.79 (MIN. 11.17) mmH_2O 0.543 (MIN. 0.440) $inchH_2O$
ACOUSTICAL NOISE (AVG. ON SINK)	61.0 (MAX. 65.0) dB-A
INSULATION TYPE	UL: CLASS A

(continued)

PART NO: 3620927211

DELTA MODEL: AFB0612DH-8G33

INSULATION STRENGTH	10 MEG OHM MIN. AT 500 VDC (BETWEEN FRAME AND (+) TERMINAL)
DIELECTRIC STRENGTH	5 mA MAX. AT 500 VAC 50/60 Hz ONE MINUTE, (BETWEEN FRAME AND (+) TERMINAL)
EXTERNAL COVER	OPEN TYPE
LIFE EXPECTANCE (AT LABEL VOLTAGE)	80,000 HOURS CONTINOUS OPERATION AT 45 °C WITH 15 ~ 65 %RH.
ROTATION	CLOCKWISE VIEW FROM NAME PLATE SIDE
OVER CURRENT SHUT DOWN	THE CURRENT WILL SHUT DOWN WHEN LOCKING ROTOR.
LEAD WIRE	UL 1430 -F- AWG #26 BLACK WIRE:NEGATIVE (-) YELLOW WIRE:POSITIVE (+) GREEN WIRE:TACHOMETER OUTPUT (F00) BLUE WIRE:SPEED CONTROL (PWM)

NOTES:
1. ALL READINGS ARE MEASURED AFTER STABLY WARMING UP THROUGH 10 MINUTES.
2. THE VALUES WRITTEN IN PARENS , ( ), ARE LIMITED SPEC.
3. ACOUSTICAL NOISE MEASURING CONDITION:

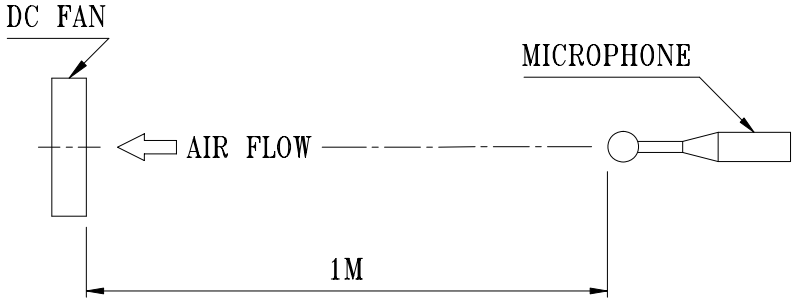

NOISE IS MEASURED AT RATED VOLTAGE IN FREE AIR IN ANECHOIC CHAMBER WITH B & K SOUND LEVEL METER WITH MICROPHONE AT A DISTANCE OF ONE METER FROM THE FAN INTAKE.

PART NO: 3620927211

DELTA MODEL: AFB0612DH-8G33

3. MECHANICAL:

3-1. DIMENSIONS ---------- SEE DIMENSIONS DRAWING

3-2. FRAME ---------- PLASTIC UL: 94V-0

3-3. IMPELLER ---------- PLASTIC UL: 94V-0

3-4. BEARING SYSTEM ---------- TWO BALL BEARING

3-5. WEIGHT ---------- 85 GRAMS

4. ENVIRONMENTAL:

4-1. OPERATING TEMPERATURE ---------- -10 TO +70 DEGREE C

4-2. STORAGE TEMPERATURE ---------- -30 TO +85 DEGREE C

4-3. OPERATING HUMIDITY --- 85% RELATIVE HUMIDITY WITH 55 DEGREE C

4-4. STORAGE HUMIDITY ---------- 5 TO 95 % RH

5. PROTECTION:

5-1. LOCKED ROTOR PROTECTION

IMPEDANCE OF MOTOR WINDING PROTECTS MOTOR FROM FIRE IN 96 HOURS OF LOCKED ROTOR CONDITION AT THE RATED VOLTAGE.

5-2. POLARITY PROTECTION

BE CAPABLE OF WITHSTANDING IF REVERSE CONNECTION FOR POSITIVE AND NEGATIVE LEADS.

6. RE OZONE DEPLETING SUBSTANCES:

6-1. NO CONTAINING PBBs, PBBOs, CFCs, PBBEs, PBDPEs AND HCFCs.

7. PRODUCTION LOCATION

7-1. PRODUCTS WILL BE PRODUCED IN CHINA OR TAILAND OR TAIWAN.

PART NO: 3620927211

DELTA MODEL: AFB0612DH-8G33

8. P & Q CURVE:

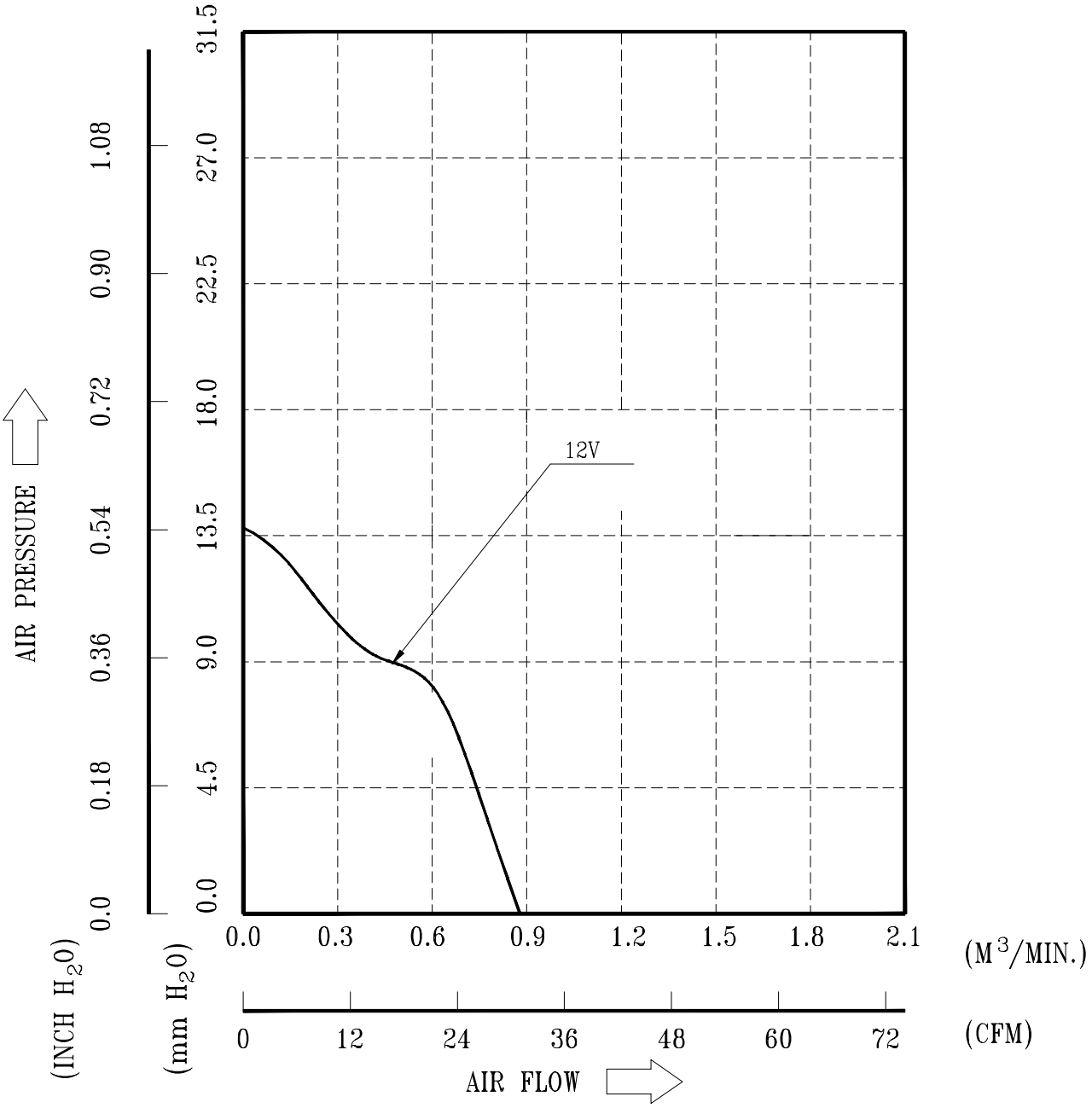

* TEST CONDITION: INPUT VOLTAGE ----- OPERATION VOLTAGE
TEMPERATURE ------ ROOM TEMPERATURE
HUMIDITY ---------- 65%RH

A00

PART NO: 3620927211

DELTA MODEL: AFB0612DH-8G33

9. DIMENSION DRAWING:

LABEL:

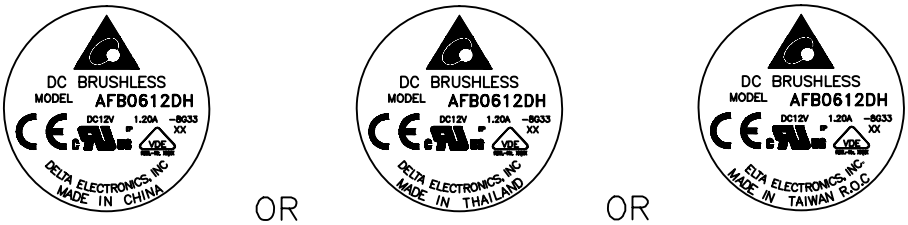

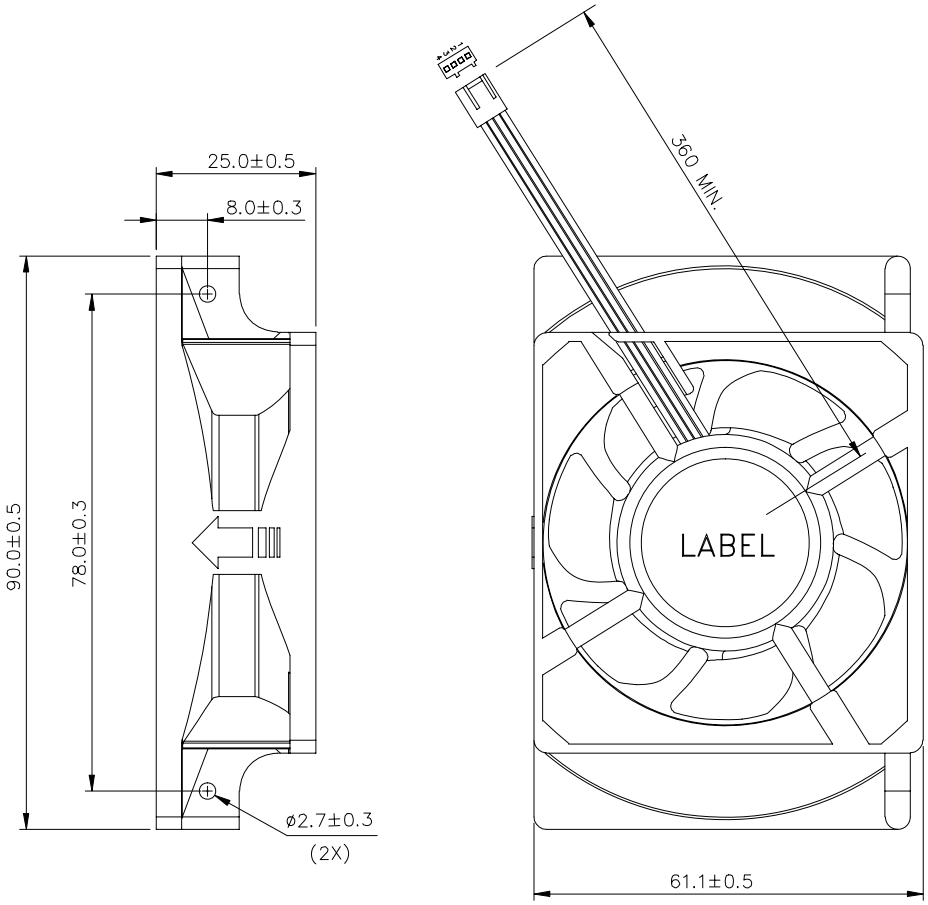

UNIT: mm

NOTES : 1. LEAD WIRE: UL 1430 -F- AWG #26

PIN 1: BLACK WIRE: NEGATIVE (-)

PIN 2: YELLOW WIRE: POSITIVE (+)

PIN 3: GREEN WIRE: TACHOMETER OUTPUT (F00)

PIN 4: BLUE WIRE: SPEED CONTROL (PWM)

2. HOUSING : MOLEX 47054-1000 OR EQUIVALENT
3. TERMINAL : MOLEX 2759T 08-50-0113 OR EQUIVALENT
4. THIS PRODUCT IS RoHS COMPLIANT

10. FREQUENCY GENERATOR (FG) SIGNAL:

10-1. OUTPUT CIRCUIT - OPEN COLLECTOR MODE:

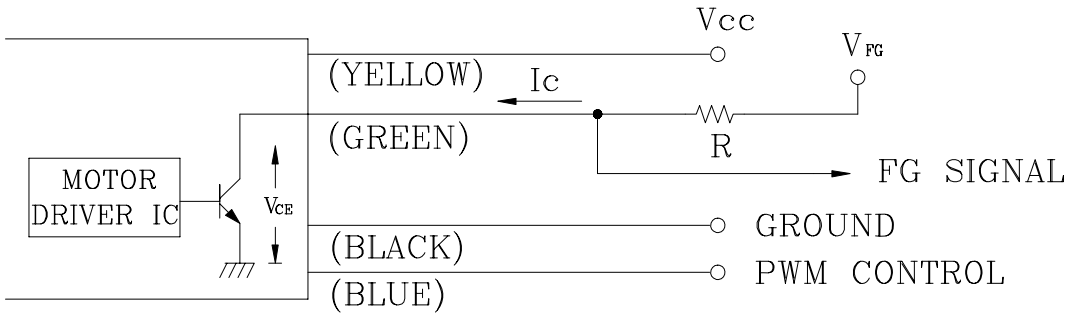

CAUTION: THE FG SIGNAL LEAD WIRE MUST BE KEPT AWAY FROM "+" LEAD WIRE & "−" LEAD WIRE.

10-2. SPECIFICATION:

V_{CE}(sat)=0.5V MAX V_{FG} =5.0V TYP. (Vcc MAX.)

I_C =5mA MAX. $R \geq V_{FG}/I_C$

10-3. FREQUENCY GENERATOR WAVEFORM:

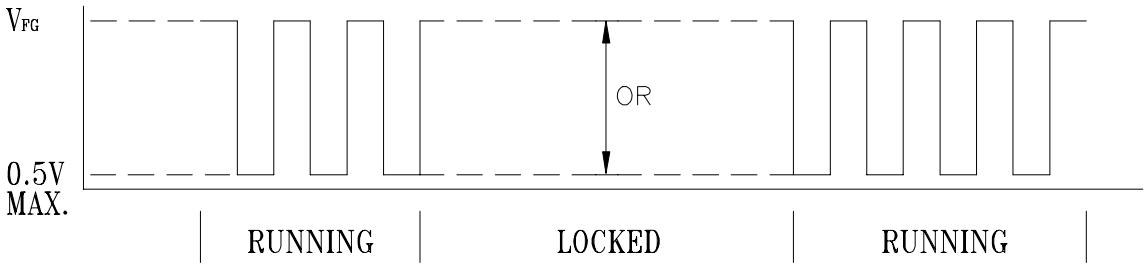

FAN RUNNING FOR 4 POLES

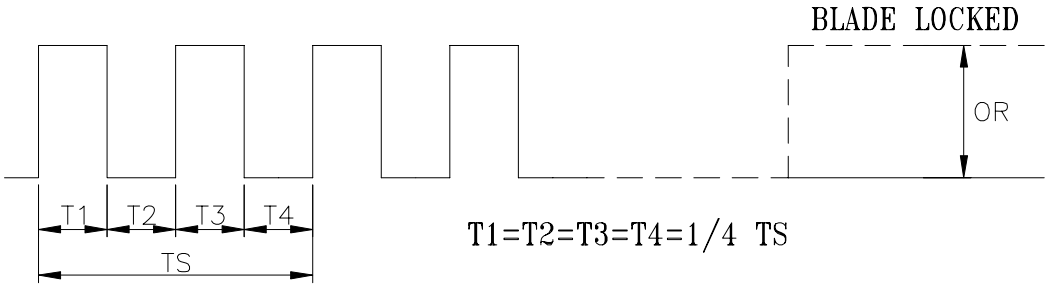

T1=T2=T3=T4=1/4 TS

N=R.P.M

TS=60/N(SEC)

*VOLTAGE LEVEL AFTER BLADE LOCKED

*4 POLES

A00

11. PWM CONTROL SIGNAL:

SIGNAL VOLTAGE RANGE: 0~5.25 VDC

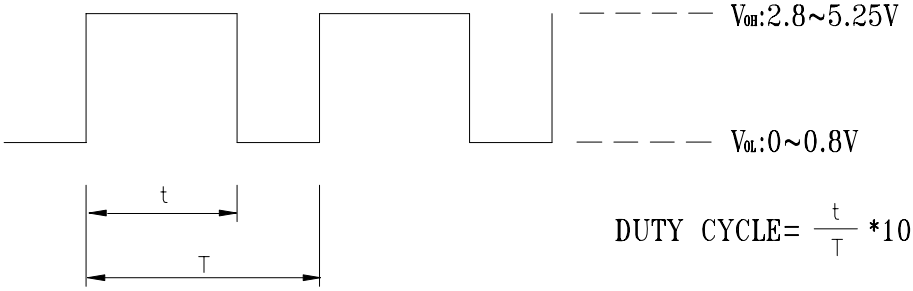

DUTY CYCLE= $\frac{t}{T}$ *100(%)

- THE FREQUENCY FOR CONTROL SIGNAL OF THE FAN SHALL BE ABLE TO ACCEPT A 21KHZ~28KHZ.
- THE PREFERRED OPERATING POINT FOR THE FAN IS 25K HZ.
- AT 100% DUTY CYCLE,THE ROTOR WILL SPIN AT MAXIMUM SPEED.
- AT 0~10% DUTY CYCLE,THE ROTOR WILL SPIN AT MINIIMUM SPEED.
- WITH CONTROL SIGNAL LEAD DISCONNECTED,THE FAN WILL SPIN AT MAXIMUM SPEED.

12. SPEED VS PWM CONTROL SIGNAL:

(AT 25°C, RATED VOLTAGE & PWM SIGNAL AS FOLLOW)

DUTY CYCLE (%)	FAN ONLY		FAN ON SINK	
	SPEED (R.P.M.)	CURRENT (A) TYP.	SPEED (R.P.M.)	CURRENT (A) TYP.
100	7300±10%	0.35	7200±10%	0.35
0~10	1000±250	0.03	1000±250	0.03

* PWM SIGNAL

PWM FREQUENCY = 25KHz

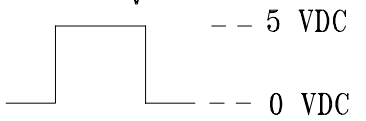

- MIN. START DUTY CYCLE : 30%.
  WHEN DUTY CYCLE IS SET FOR MORE THAN 30%, THE FAN WILL BE ABLE TO START FROM A DEAD STOP.

13. PWM CONTROL LEAD WIRE INPUT IMPEDANCE:

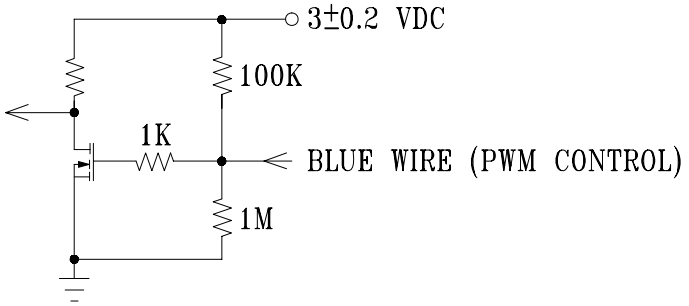

Application Notice

1. Delta will not guarantee the performance of the products if the application condition falls outside the parameters set forth in the specification.
2. A written request should be submitted to Delta prior to approval if deviation from this specification is required.
3. Please exercise caution when handling fans. Damage may be caused when pressure is applied to the impeller, if the fans are handled by the lead wires, or if the fan was hard-dropped to the production floor.
4. Except as pertains to some special designs, there is no guarantee that the products will be free from any such safety problems or failures as caused by the introduction of powder, droplets of water or encroachment of insect into the hub.
5. The above-mentioned conditions are representative of some unique examples and viewed as the first point of reference prior to all other information.
6. It is very important to establish the correct polarity before connecting the fan to the power source. Positive (+) and Negative (-). Damage may be caused to the fans if connection is with reverse polarity, if there is no foolproof method to protect against such error specifically mentioned in this spec.
7. Delta fans without special protection are not suitable where any corrosive fluids are introduced to their environment.
8. Please ensure all fans are stored according to the storage temperature limits specified. Do not store fans in a high humidity environment. We highly recommend performance testing is conducted before shipping, if the fans have been stored over 6 months.
9. Not all fans are provided with the Lock Rotor Protection feature. If you impair the rotation of the impeller for the fans that do not have this function, the performance of those fans will lead to failure.
10. Please be cautious when mounting the fan. Incorrect mounting of fans may cause excess resonance, vibration and subsequent noise.
11. It is important to consider safety when testing the fans. A suitable fan guard should be fitted to the fan to guard against any potential for personal injury.
12. Except where specifically stated, all tests are carried out at room (ambient) temperature and relative humidity conditions of 25°C, 65% RH. The test value is only for fan performance itself.
13. Be certain to connect an " 4.7µF or greater" capacitor to the fan externally when the application calls for using multiple fans in parallel, to avoid any unstable power.